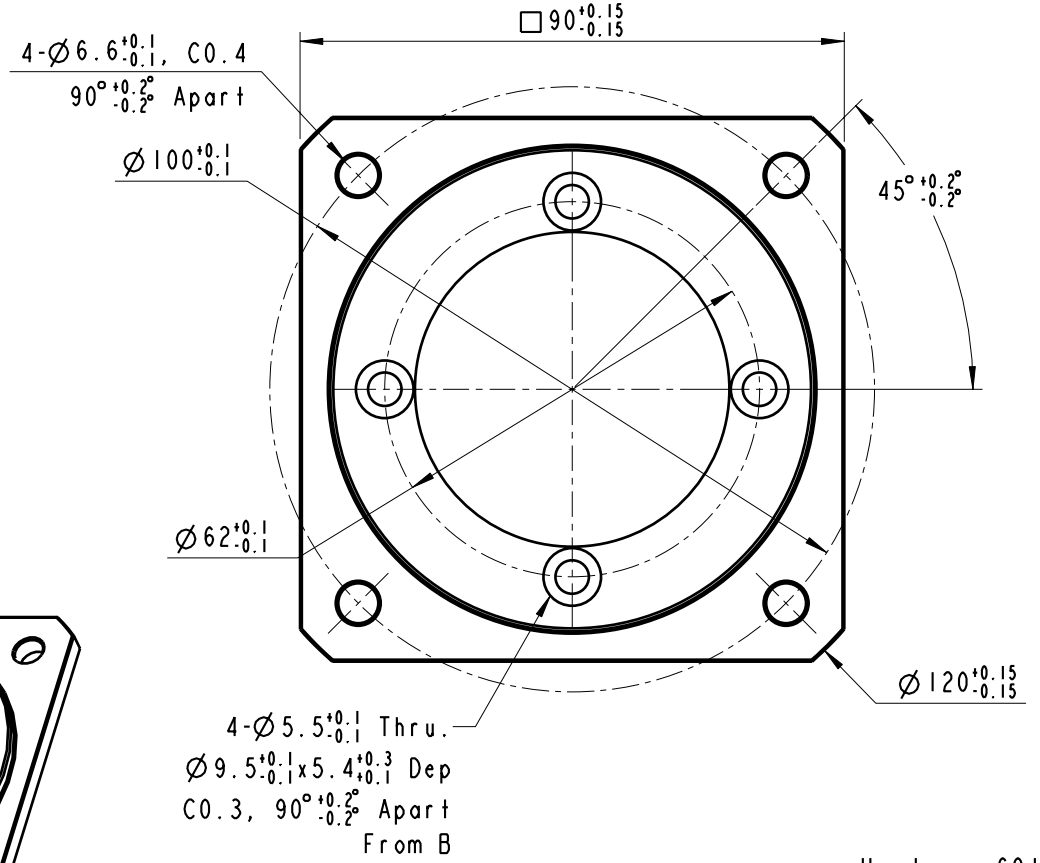

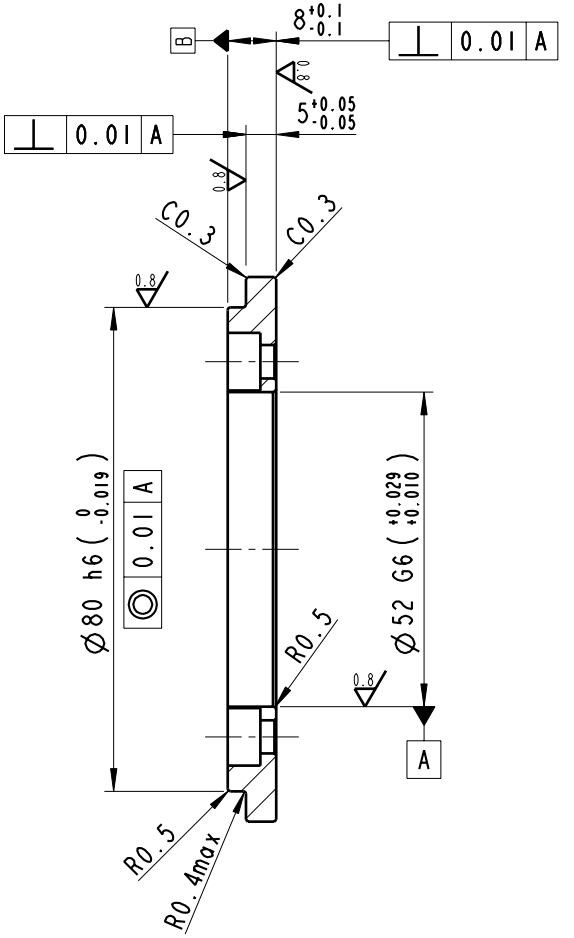

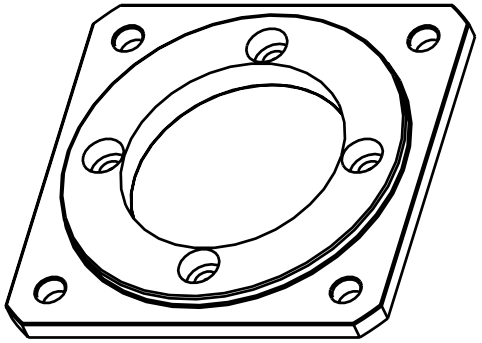

SCALE 3:5

Hardness 60±5 HRB
Mass= 0.097 Kg
Fix Plate For AE070-DT90/PX90

	AL6061		PF120003	Front Plates
No	Material	Qty	Part No	Part Name

APEX DYNAMICS, INC.

Dwg Name	FP-W90-D80			Page	1 / 1
Dwg No	PF120003			Size	A4
Appover			Scale	4:5	
Checker			Date	21-Oct-05	
Designer	Jacky Hsueh		Drawer	Jacky Hsueh	

APEX DYNAMICS, INC.

Rev No	Revision Content	Revisier	Approver	Date